Mobile Device Architecture
Advanced Computer Architecture
COMP 140
Tuesday June 24, 2014

A brief history of “mobile” computing, in pictures

A brief history of “mobile” computing, in pictures

Texas Instruments Speak & Spell
1978

https://www.youtube.com/watch?v=RpeegJ0J5mE

A brief history of “mobile” computing, in pictures

Compaq Portable, 1983.
$3590 with two 5.25” floppy disk drives, 128KB memory,4.77MHz 8088 processor.
28lbs

A brief history of “mobile” computing, in pictures

Commodore SX-64
1984, First “full color” portable. 1.02Mhz, 64KB memory, 320x200 graphics
5” monitor, 5.25” floppy drive. 23 lbs.

A brief history of “mobile” computing, in pictures

Casio CFX-400 Scientific Calculator Watch
circa 1985

A brief history of “mobile” computing, in pictures

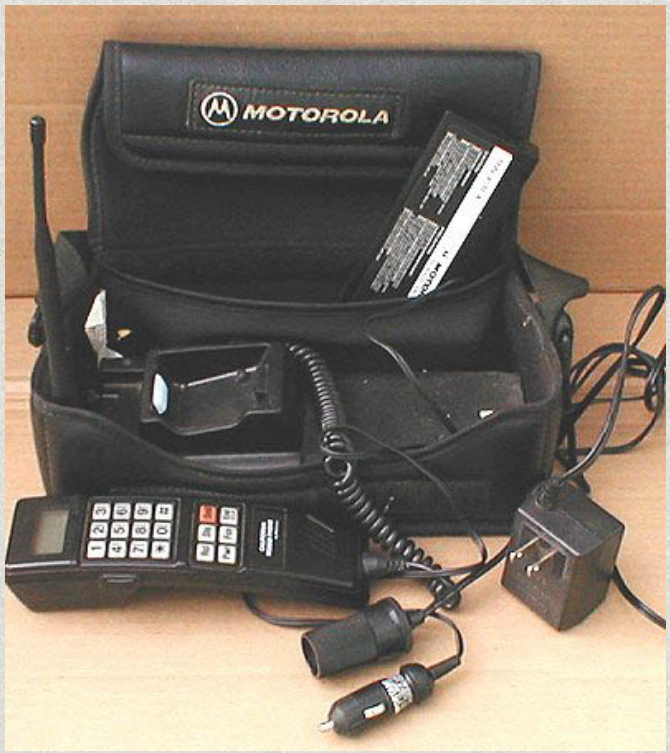

Motorola Car Phone (“Bag Phone”) and car antenna
circa 1990
Analog network

A brief history of “mobile” computing, in pictures

http://mouthy.buzznet.com/user/video/151938/eat-up-martha/

Apple Newton
circa 1990
ARM 610 RISC processor, handwriting (!) recognition

A brief history of “mobile” computing, in pictures

Palm Pilot
circa 1996

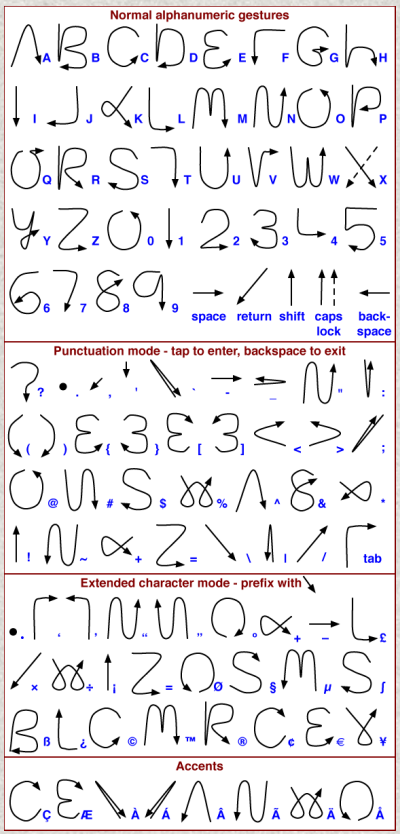

“graffiti” handwriting recognition

A brief history of “mobile” computing, in pictures

Garmin GPS 80
circa 2000

Garmin Forerunner 305
circa 2006

A brief history of “mobile” computing, in pictures

Sony Walkman
1979

Apple iPod
2001

Apple iPod models up to shuffle
(all discontinued)

A brief history of “mobile” computing, in pictures

Fuji
DS-X
Digital Camera
1989
0.4MP
$20,000

Sony Cyber-shot
DCS-T3
2004
5.1MP
640 x 480, 30 fps video
$550

Sony Cyber-shot
DSC-TX30
2013
18.2MP
1080/60i video
$348

A brief history of “mobile” computing, in pictures

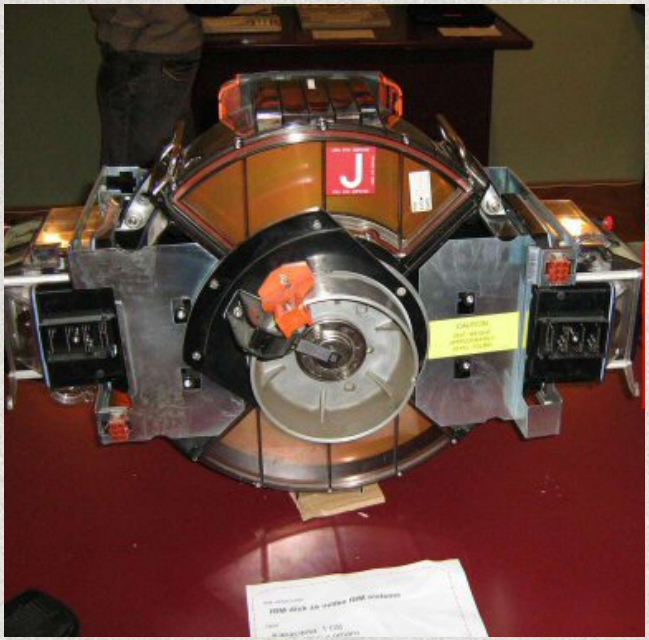

1GB Hard Drive 1980s
$200,000

32GB Micro SD
2014
$15

A brief history of “mobile” computing, in pictures

Coleco “Electronic Quarterback”
1978

Nintendo Gameboy
1989

Playstation Portable
2004

A brief history of “mobile” computing, in pictures

T-Mobile Sidekick
2002

Apple 1st Gen iPhone
2007

Apple Siri voice recognition
2011

A brief history of “mobile” computing, in pictures

Samsung Galaxy S5
LTE 50Mbps
2.5GHz Quad-core, Krait 400
1920x1080 Display
16MP back camera
2.0MP front camera
2GB RAM
32 ALU GPU, 166.5 GFLOPs
802.11ac
Accelerometer, Gyro, Proximity, Compass
GPS receiver
HeartRate Sensor
Bluetooth 4.0
21 hours talk time
16 days standby
2014
$650 (no contract)

The Krait (“Snapdragon”) 400 CPU

- ARM based System on Chip
- 11 stage integer pipeline with 3-way decode and 4-way out-of-order speculative issue superscalar execution
- Pipelined VFPv4 and 128-bit wide NEON (SIMD)
- 7 execution ports
- 4 KB + 4 KB direct mapped L0 cache
- 16 KB + 16 KB 4-way set associative L1 cache
- 1 MB 8-way set associative (dual-core) or 2 MB (quad-core) L2 cache
- Dual or quad-core configurations
- 28 nm fabrication technology
- ARM v7 instruction set

The evolution of the ARM Architecture

Evolution of the ARM Architecture

- Original ARM architecture:
  - 32-bit RISC architecture
  - 16 Registers - 1 being the Program counter – generally accessible
  - Conditional execution on all instructions
  - Load/Store Multiple operations - Good for Code Density
  - Shifts available on data processing and address generation
  - Original architecture had 26-bit address space
    - Augmented by a 32-bit address space early in the evolution
- Thumb instruction set was the next big step
  - ARMv4T architecture (ARM7TDMI)
  - Introduced a 16-bit instruction set alongside the 32-bit instruction set
  - Different execution states for different instruction sets
  - Switching ISA as part of a branch or exception
  - Not a full instruction set – ARM still essential

The ARM Architecture

Processor Modes

- The ARM has seven basic operating modes:
  - **User** : unprivileged mode under which most tasks run
  - **FIQ** : entered when a high priority (fast) interrupt is raised
  - **IRQ** : entered when a low priority (normal) interrupt is raised
  - **Supervisor** : entered on reset and when a Software Interrupt instruction is executed
  - **Abort** : used to handle memory access violations
  - **Undef** : used to handle undefined instructions
  - **System** : privileged mode using the same registers as user mode

The ARM Architecture

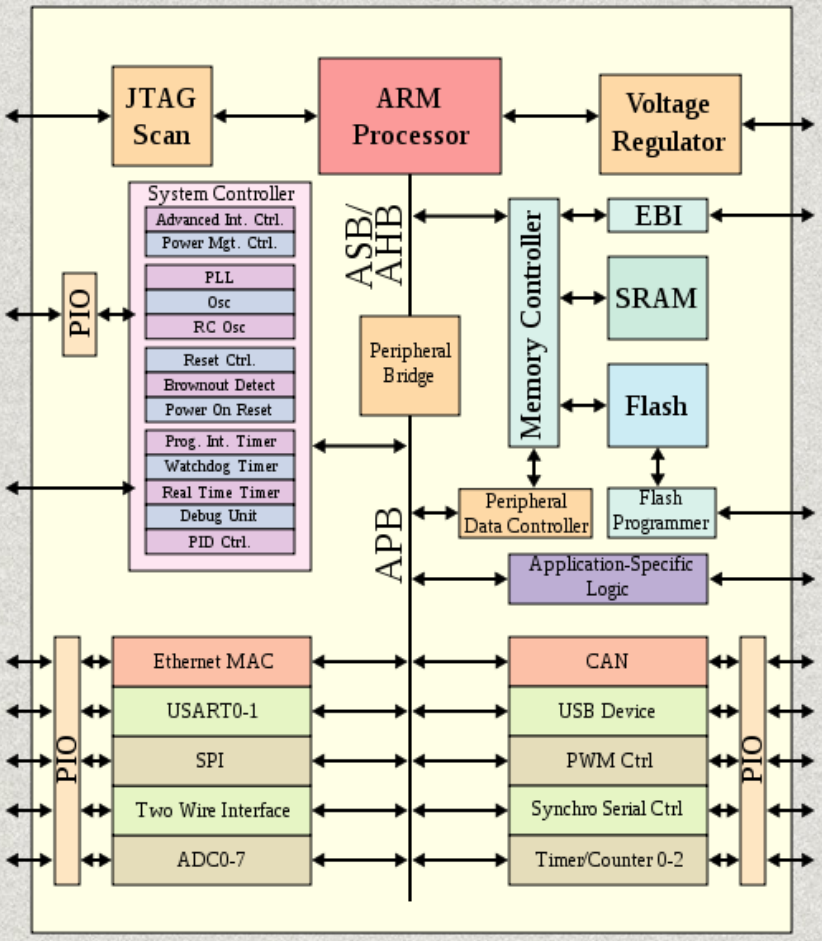

The ARM processor is generally part of a "System on Chip" which is a single chip that typically consists of:

- A microcontroller, microprocessor or DSP core(s). Some SoCs—called *multiprocessor system on chip* (MPSoC)—include more than one processor core.
- Memory blocks including a selection of ROM, RAM, EEPROM and flash memory.
- Timing sources including oscillators and phase-locked loops.
- Peripherals including counter-timers, real-time timers and power-on reset generators.
- External interfaces including industry standards such as USB, FireWire, Ethernet, USART, SPI.
- Analog interfaces including ADCs and DACs.
- Voltage regulators and power management circuits.

The ARM Architecture

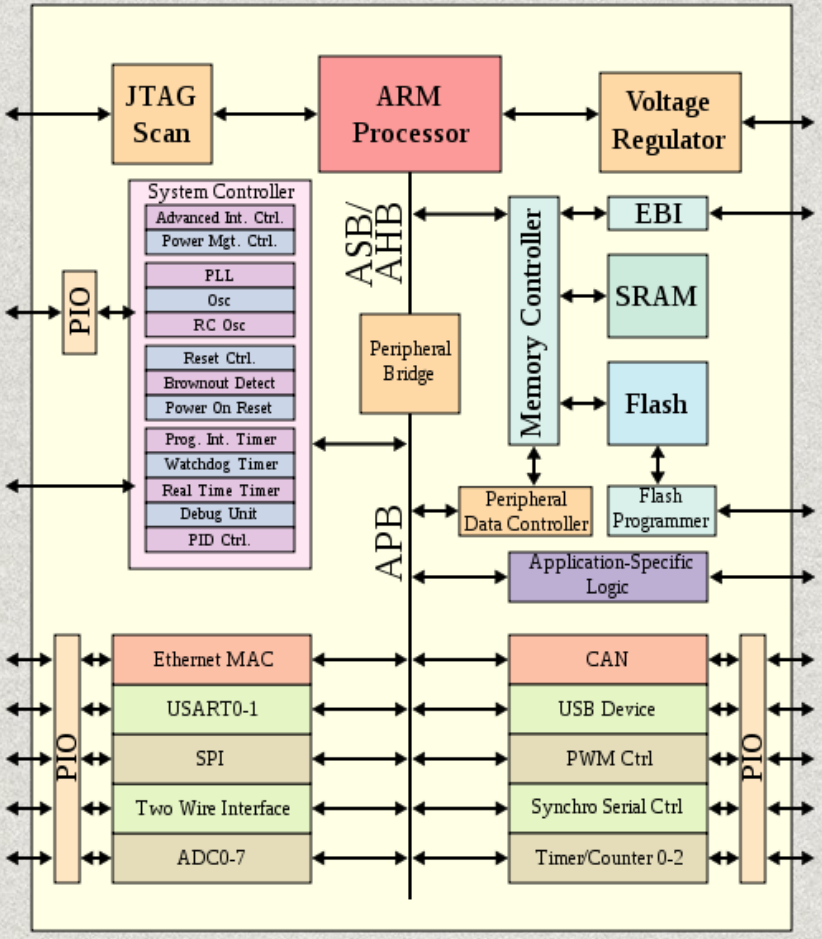

Advantages of SoC

- Decreased power consumption
- Increased reliability
- Smaller board space
- Can be cheaper when using ready to go components
- Mix-and-match components
- Someone else designs the components

Disadvantages of SoC

- Extremely high design cost (for the actual chip)
- Large silicon space may be required
- Component testing may be difficult
- Prototyping may take longer
- Intellectual property (IP) issues

Today's version of Mobile Computing includes:

- ☑ Phone
- ☑ Multicore processor
- ☑ GPU
- ☑ Digital cameras (still and video)
- ☑ Wifi / LTE Internet access
- ☑ Bluetooth
- ☑ Music / Video Player
- ☑ Accelerometer
- ☑ Gyroscope
- ☑ Compass
- ☑ GPS
- ☑ Barometer
- ☑ High-Definition Screen
- ☑ Fingerprint Scanner
- ☑ Voice Recognition
- ☑ Office apps, browsers
- ☑ Games
- ☑ Force feedback
- ☑ Multi-day battery
- ☑ … Virtually unlimited "computing"

Architecturally, today's mobile computing platform is a huge hybrid of a phenomenal amount of technologies:

batteries,
processors
sensors
communications devices
input/output devices
and software.

The iPhone fingerprint scanner (biometrics for security)

- There are two primary technology methods for fingerprint authentication—electro-optical and capacitance.
- EO:
  - Like traditional scanners: they use bright lights to illuminate the peaks and valleys of the print and a CCD device to capture a black and white image—white areas are peaks, dark areas are valleys.
  - A computer algorithm compares the pattern of light-dark intersections, known as minutiae (ie where two ridges meet or a ridge splits), in this image to one already on file for the individual. If enough intersections match, the identity is considered verified and access is granted.
- Capacitive:
  - Relies on an array of minuscule capaciative cells, each less than a finger ridge wide.
  - These cells consist of two conductor plates separated by an insulating layer.
  - A finger's ridges on the capaciative scanner will cause some plates to come into contact, thereby closing a circuit and generating current, while the cells under the ridges on your fingers remain separate.
  - The system interprets the voltages generated by each cell to determine which one is under a ridge and which is under a valley.
  - By combining this data the scanner can generate an overall image of the print
  - Requires an actual fingerprint shape to work, not just a light-dark pattern, which makes them harder to spoof.

MEMS Sensors

- The tiny sensors in a mobile device are called “micro electro-mechanical systems,” or MEMS.
- MEMS are made up of components between 1 to 100 micrometres in size (i.e. 0.001 to 0.1 mm), and MEMS devices generally range in size from 20 micrometres (20 millionths of a metre) to a millimetre (i.e. 0.02 to 1.0 mm).
- At these size scales, the standard constructs of classical physics are not always useful.
- Because of the large surface area to volume ratio of MEMS, surface effects such as electrostatics and wetting dominate over volume effects such as inertia or thermal mass.

- MEMS can be made out of silicon, polymers, metals, and ceramics.
- They are crafted using sophisticated chemical techniques that involve depositing films of material onto a surface
- See Richard Feynman’s lecture, “There is plenty of room at the bottom!” https://www.youtube.com/watch?v=4eRCygdW--c

- MEMS accelerometers: http://en.wikipedia.org/wiki/Microelectromechanical_systems
- MEMS gyroscope: https://www.youtube.com/watch?v=zwe6LEYF0j8
- MEMS barometer: https://www.youtube.com/watch?v=46nmq8vz6FQ
- MEMS magenometer (used in the compass): (detailed!) http://www.memsic.com/userfiles/files/publications/Articles/Electronic_Products_Feb_%202012_Magnetometer.pdf

References

- System on Chip: http://en.wikipedia.org/wiki/System_on_a_chip
- ARM Architecture: http://en.wikipedia.org/wiki/ARM_architecture
- The iPhone fingerprint scanner: http://gizmodo.com/how-the-iphone-5ss-fingerprint-scanner-works-and-what-1265703794
- smartphone accelerometers: https://www.youtube.com/watch?v=KZVgKu6v808#t=243
- MEMS: http://en.wikipedia.org/wiki/Microelectromechanical_systems